Dimension Drawing - MultiPlus-II	
PMP482605012	MultiPlus-II 48/6k5/100-50 230V

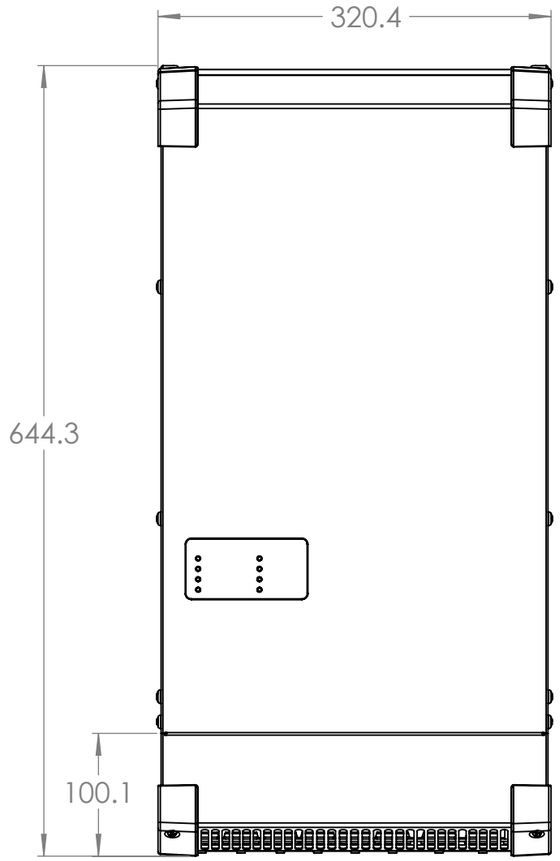

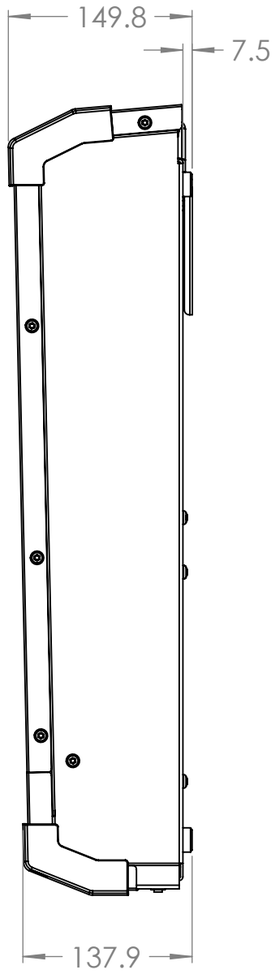

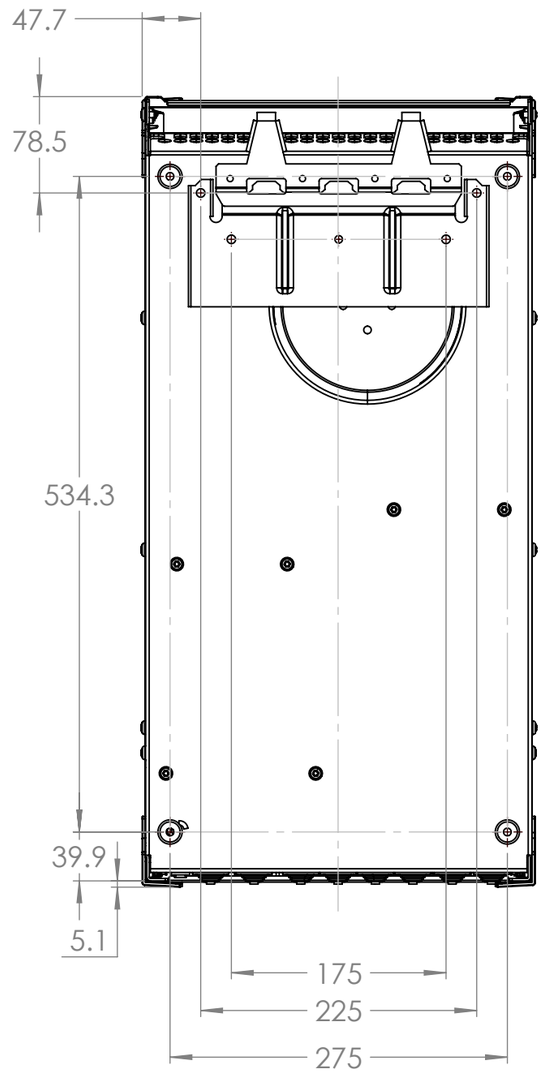

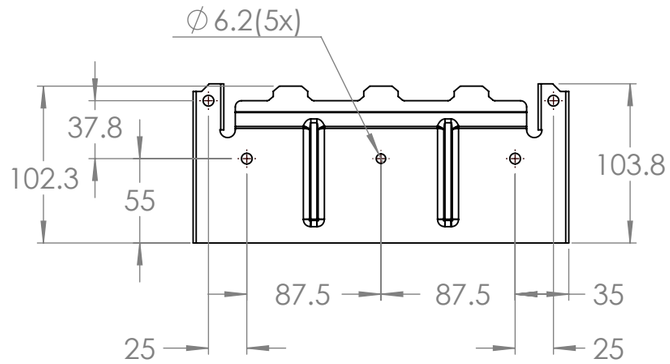

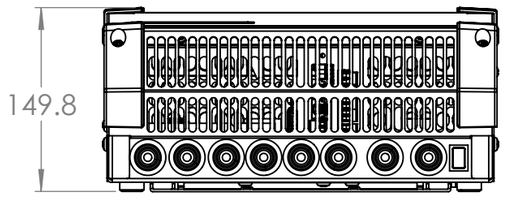

Dimensions in mm

victron energy
BLUE POWER

Rev-00